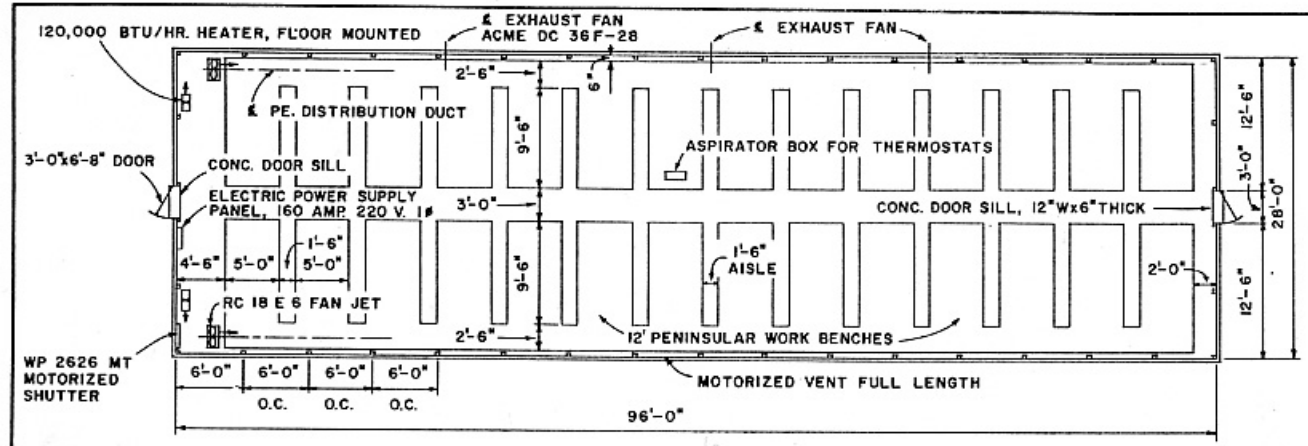

GREENHOUSE PLAN

SCALE: 1/8"=1'-0"

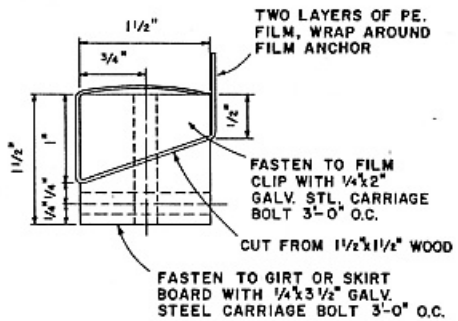

FILM ANCHOR DETAIL

FULL SCALE

NOTE:
PE.=POLYETHYLENE

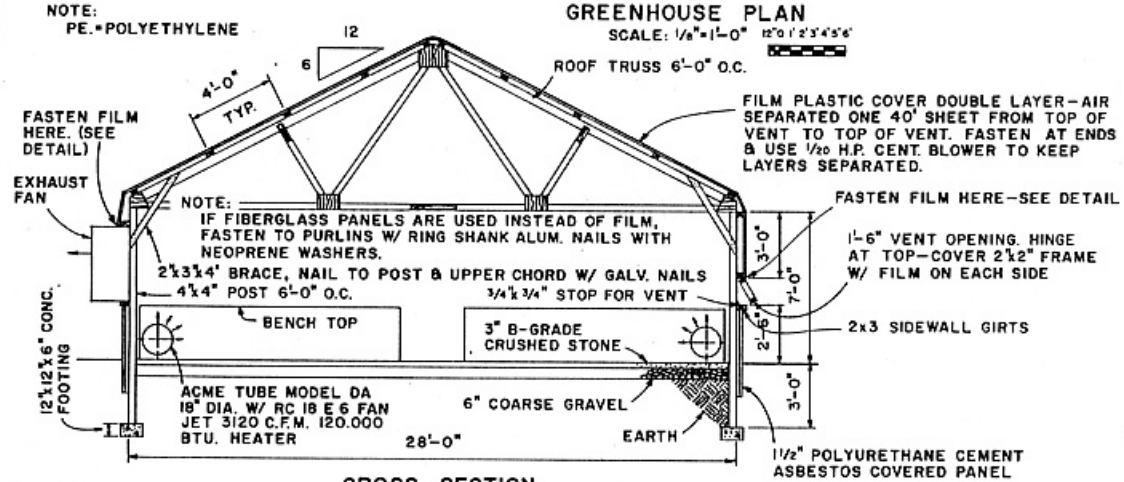

CROSS SECTION

SCALE: 1/4"=1'-0"

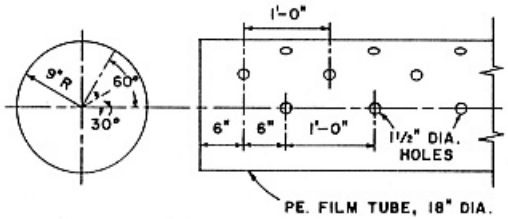

HEATING DUCT HOLE LOCATION

SCALE: 1"=1'-0"

NOTE:
CARRY FOOTINGS BELOW FROST LINE

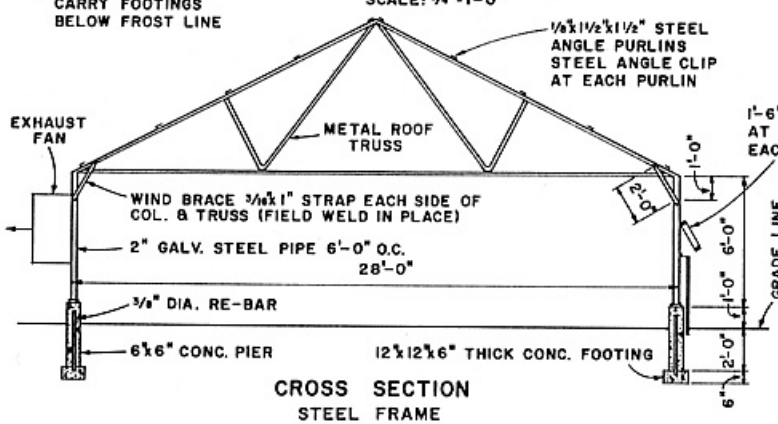

CROSS SECTION

STEEL FRAME

SCALE: 1/4"=1'-0"

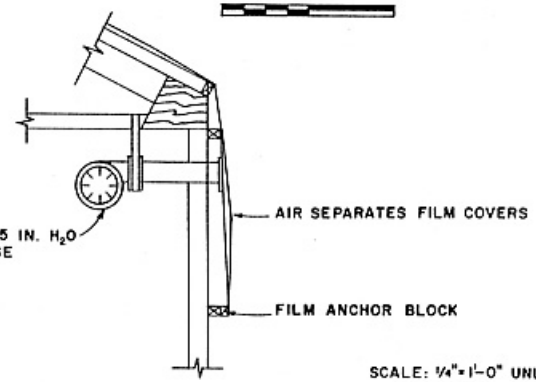

BLOWER DETAIL

SCALE: 3/4"=1'-0"

SCALE: 1/4"=1'-0" UNLESS OTHERWISE NOTED

NOTE:
CONSULT LOCAL HEALTH AND BUILDING CODE AUTHORITIES BEFORE STARTING CONSTRUCTION.

MENTION OF A TRADE NAME DOES NOT CONSTITUTE A GUARANTEE OR WARRANTY OF THE PRODUCT BY THE U.S. DEPARTMENT OF AGRICULTURE OR AN ENDORSEMENT BY THE DEPARTMENT OVER OTHER PRODUCTS NOT MENTIONED.

BASED ON: PENNA. STATE UNIV. PLAN NO. 822-349

COOPERATIVE EXTENSION WORK IN AGRICULTURE AND HOME ECONOMICS
STATE OF TENNESSEE
UNIVERSITY OF TENNESSEE
AND
UNITED STATES DEPARTMENT OF AGRICULTURE COOPERATING

28' GREENHOUSE

PA. '74	6185	SHEET 1 OF 3

AGRICULTURAL ENGINEERING DEPARTMENT