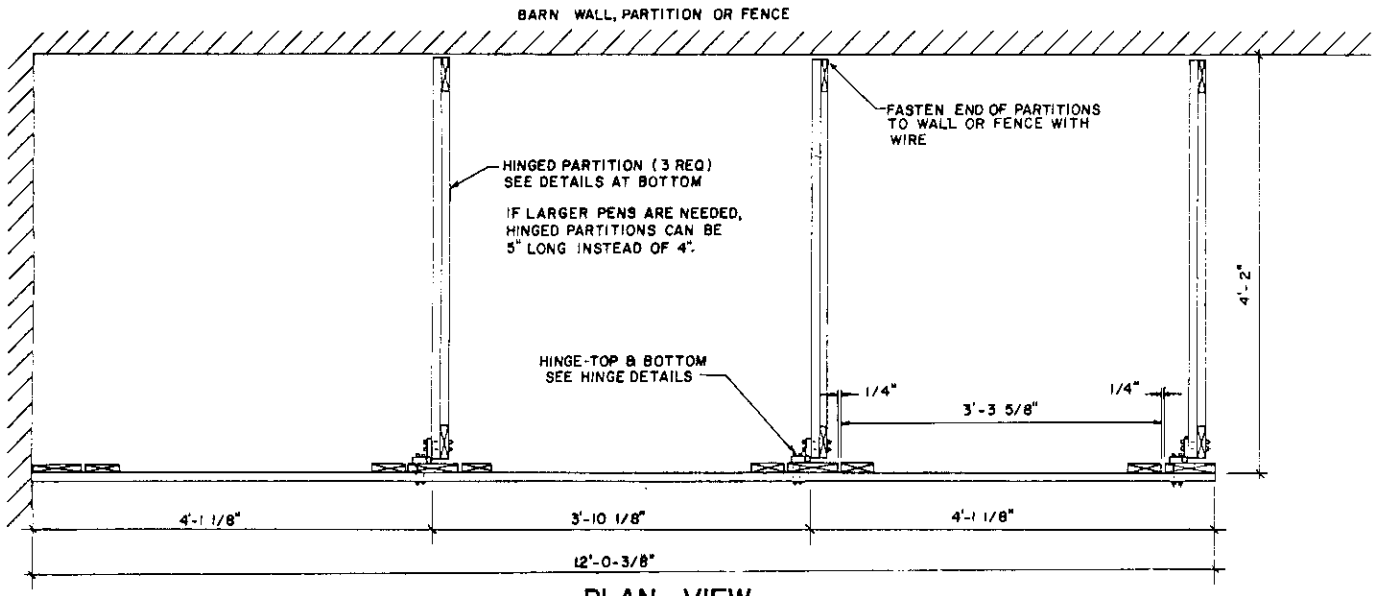

PLAN VIEW

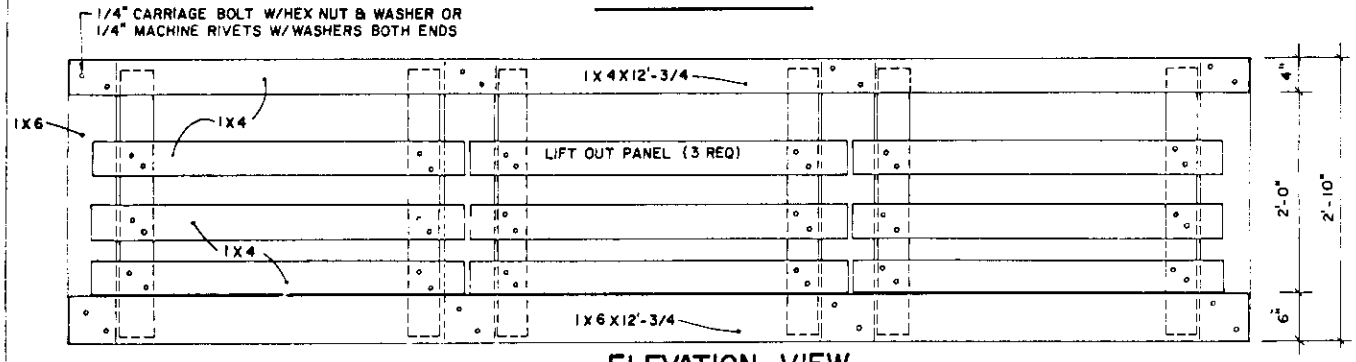

ELEVATION VIEW

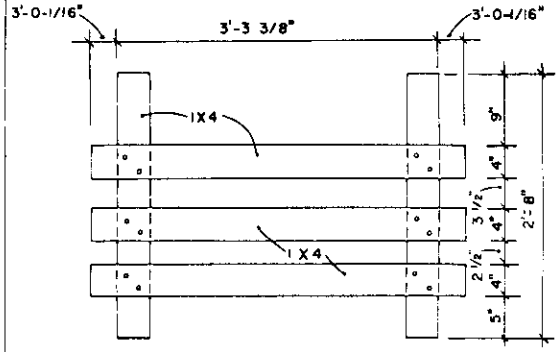

LIFT OUT PANAL DETAILS

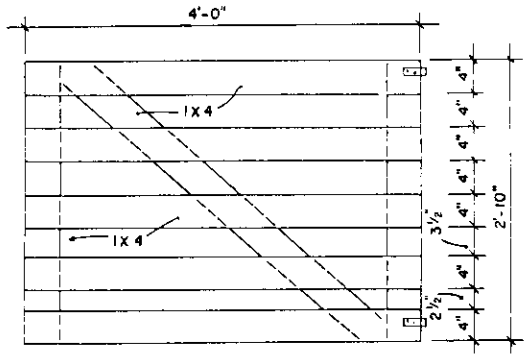

PARTITION DETAILS

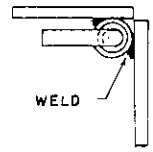

TOP VEIW

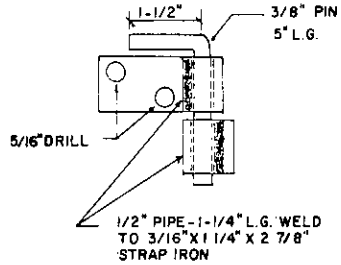

SIDE VIEW

HINGE DETAILS

SCALE:

12" 6" 0 1' 2' 3' 4'

NOTES

1 SIZES SHOWN ARE FOR FULL DIMENSION LUMBER

2. SURFACED LUMBER CAN BE USED OVERALL DIMENSIONS WILL BE THE SAME BUT SPACING BETWEEN SOME MEMBERS WILL BE DIFFERENT

12' 2' 4' 8' 12' 16' 20'

SCALE: UNLESS OTHERWISE NOTED

BASE ON: UNIV. OF WEST VIRGINIA PLAN SH-161

COOPERATIVE EXTENSION WORK IN AGRICULTURE AND HOME ECONOMICS

AND UNITED STATES DEPARTMENT OF AGRICULTURE COOPERATING

PORTABLE LAMBING UNIT

W.V. '73	EX.6304	SHEET 1 OF 1