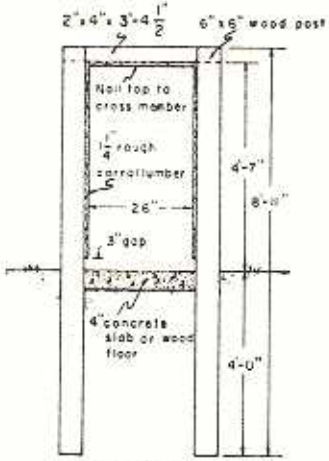

SECTION A-A

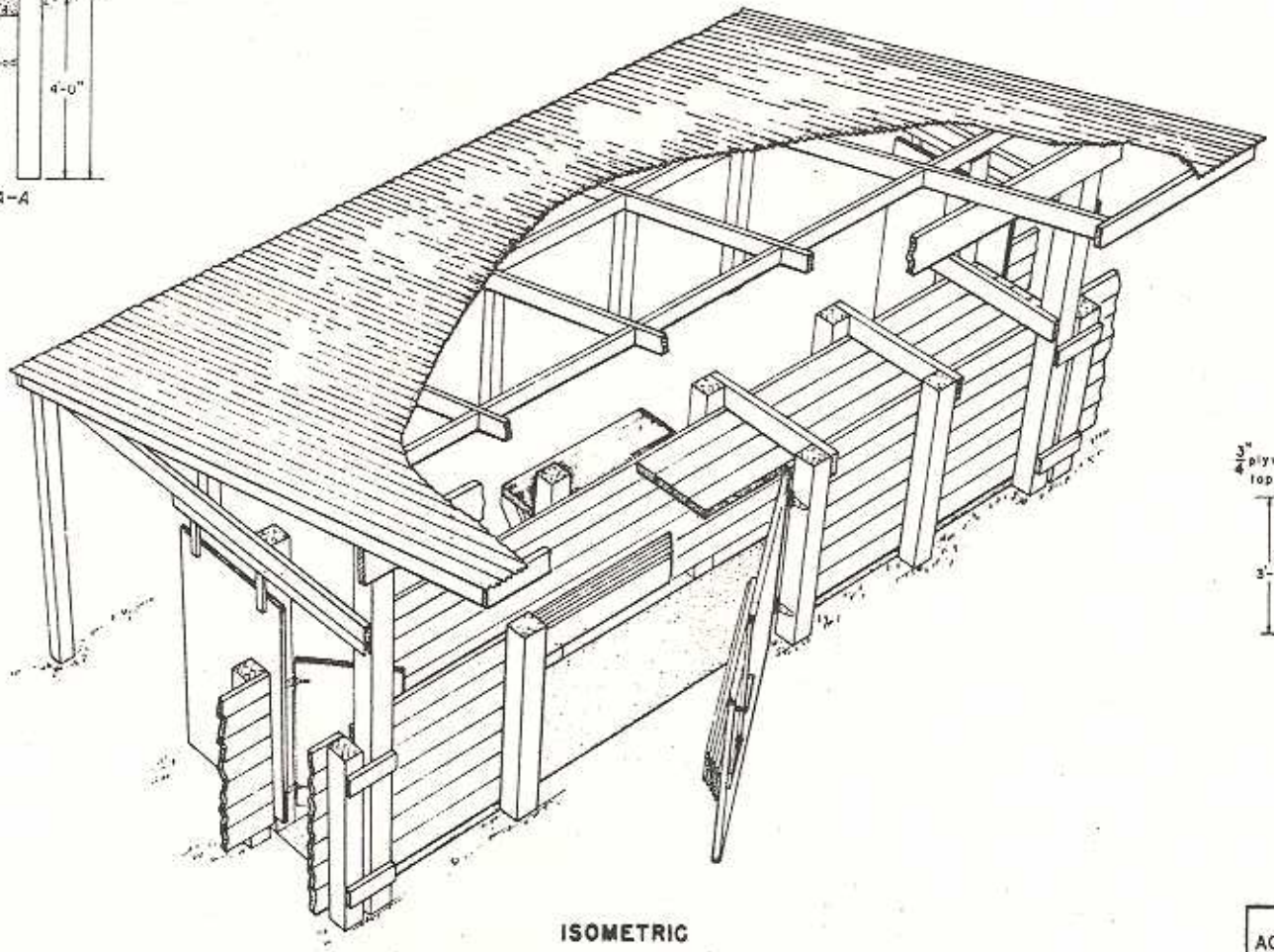

ISOMETRIC

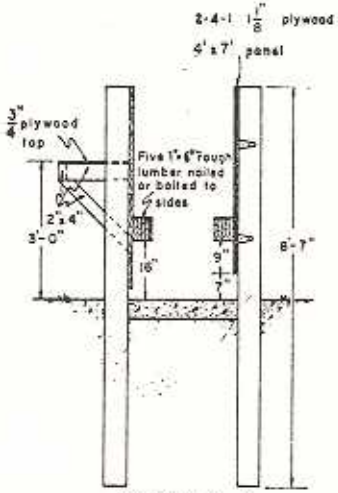

SECTION B-B

SCALE: 0 1' EXCEPT AS NOTED

Designed by: Gene Rombo
University of Calif. Plan C
Davis, Calif.

COOPERATIVE EXTENSION WORK IN
AGRICULTURE AND HOME ECONOMICS
DEPARTMENT OF AGRICULTURAL ENGINEERING
UNIVERSITY OF MARYLAND
AND
UNITED STATES DEPARTMENT OF AGRICULTURE COOPERATING

BREEDING CHUTE
FOR BEEF CATTLE

CALIF. '70	6103	SHEET 1 OF 2